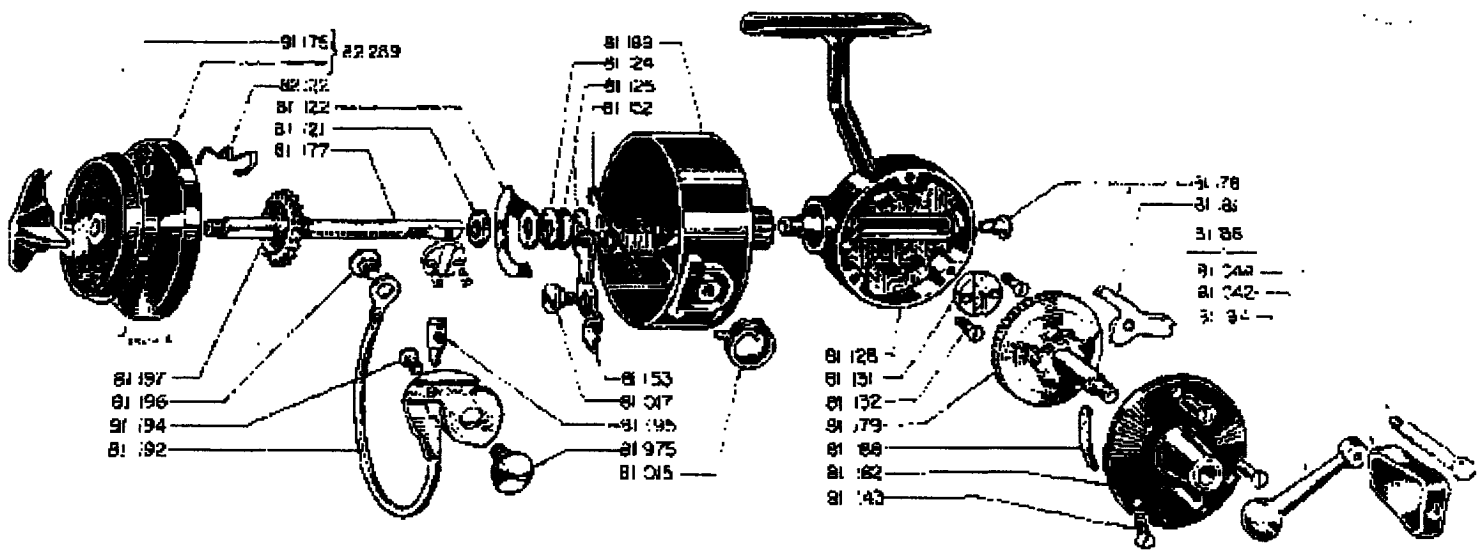MITCHELL 340